GENERAL INFORMATION

Installation of the cubicles should begin with measuring the floor slope as well as the perpendicularity and flatness of the walls in the areas where the aluminum wall profiles will be mounted. The brackets should be initially adjusted to account for the direction of the floor slope. If installation begins at the wall where the lowest point of the floor is located, the bracket screw should be unscrewed to its maximum extent. If the floor elevation at that point is the highest, the screw should be tightened as much as possible.

Important: In the case of significant floor slopes (exceeding 2 cm), the initial clearance should be adjusted accordingly.

PREPARATION FOR INSTALLATION

1. The cubicles are manufactured in the following types:

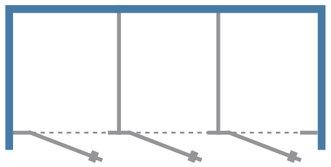

I - mounted between walls

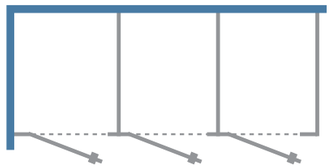

II - mounted in the corner

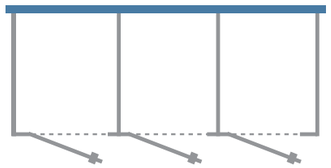

III - mounted against the rear wall

In the case of delivery of several cubicle sets, all elements are marked according to the description on the supplied drawings. (Cubicles may remain unmarked if their number is small enough to avoid confusion of components.)

1. The ordered lengths of the front walls of individual cubicle sets have been achieved by manufacturing intermediate panels (narrow strips) with precisely calculated widths. Unless explicitly requested otherwise by the customer, the widths of panels in the end walls and intermediate panels within one cubicle set are identical; they form a complete set and care should be taken not to mix them with panels from other sets.

2. The distance between door leaves should be 6 mm.

3. Before starting installation, screw profiles C10, C12, C18 to the intermediate and corner panels using screws:

D – ø 4x8 for HPL systems

E – ø 3.5x16 for MFC systems

4. Due to frequent deviations in vertical alignment and wall flatness, profiles C10, C12, C18 fixing the system panels to the wall are not connected to the boards and must be fastened using screws:

B – ø 4.2 x 9.5 mm – HPL system, first drill the profile in the recess using a 3.5 mm drill bit,

glue during installation and additionally fasten with screws **C** – ø 4.2 x 16 mm – MFC system.

Apply adhesive along the entire length in the recesses on the internal side surfaces of the profile walls.

5. The silicone adhesive curing time is min. 3 hours.

6. The panels are mounted on supports fixed to the floor using expansion anchors. The supports should be fitted with aluminum thread protection sleeves and then reinforced by tightening the lock nut. The standard clearance for the system is 180 mm.

ALSANIT®

ASSEMBLY INSTRUCTION

Scan the QR code

to watch the instruction video.

AQUARI
SWING DOORS

REQUIRED TOOLS

- L-shaped TORX key TX 20
- Tape measure
- Spirit level at least 1 m long
- Soft pencil or fine pen
- 17 mm wrench - flat
- Cordless screwdriver with TX bit
- Electric drill with 8 mm tile drill bits
- Metal drill bits: Ø 3.5 mm
- Adjustable height support 160 – 200 mm

Cubicles must be installed in cleaned rooms after all masonry, painting, and tiling works have been completed.
Maintaining proper vertical and horizontal alignment is essential for correct installation of the system.

To prevent damage to the surfaces of panels and profiles forming the cubicles, delivered elements should be placed and supported on polystyrene pads throughout the entire installation process.
If it is necessary to store the delivered panels for a longer period, they should be placed in a dry room on a level, flat surface, with each layer separated by polystyrene to prevent warping.

Support: www.alsanit.ie/for-the-customer

Scan the QR code to watch the instruction video

https://youtu.be/YgpeL8RIS9o

AQUARI – swing doors

ALSANIT®

1	core bracket cover
2	base for the bracket
3	wall anchor
4	silicone
5	**A** screw 5.0 x 50 mm
6	**B** for HPL screw 4.2 x 9.5 mm
7	**C** fot MFC screw 4.2 x 16 mm
8	**D** dla HPL wkręt 4 x 8 mm
9	**E** for HPL screw 3.5 x 16 mm
10	
11	
12	
13	

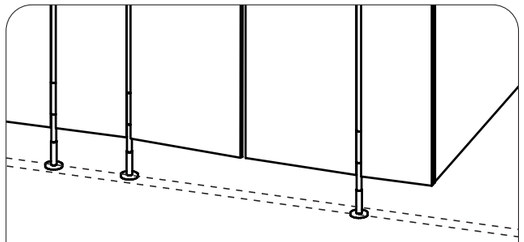

Note: Due to the specific characteristics of the system, the doors may not be aligned. To achieve the best visual effect, adjust the front line of the installation by appropriately offsetting the partition panels from the rear wall and adjusting their tilt within the C profile. Consequently, the supports of the intermediate panels may not be aligned.

5

1. Clean and remove any dirt from the surfaces of panels and profiles using the „A1" daily care cleaning agent.

4

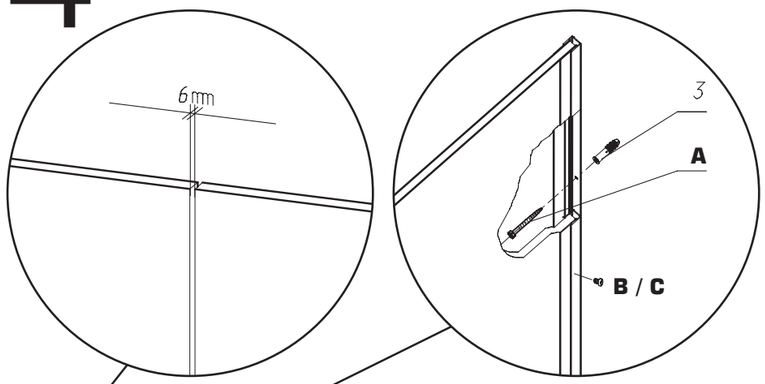

1. Connect the inter-door panel to the partition wall profile:
- **HPL construction:** with screws **D** - 4 x 8 mm,
- **MFC construction:** glue into the profile, additionally fasten with screw: **E** - ø 3,5 x 16 mm.

2. Position the next door frame element together with the installed partition panel. Maintain the gap between door leaves (6 mm) and align the top edge of the door and the door frame element with the previously installed element.

3. By rotating the support bases in the appropriate direction, level the heights of the wall element and the inter-door element according to step 2.

4. After adjusting the height and carefully aligning vertically, mark the exact position of the profile fixing the panel to the wall.

5. Remove the profile from the panel, place it against the wall at the marked position, mark the axes on the wall, and drill 8 mm holes for wall plugs.

6. Fix the profile to the wall with screws:

A - ø 5,0 x 50 mm, insert the wall element and align it vertically.

7. From inside the cabin, drill holes along the recess line on the profile through the inner wall of the profile and the panel using a ø 3,5, drill bit, to a depth of:

HPL construction: max. 10 mm

MFC construction: max. 18 mm

Then fasten the panel to the profile with screws:

HPL construction: **B** - ø 4,2 x 9,5 mm.

MFC construction: glue into the profile, then additionally secure with screws: **C** – 4.2 x 16 mm.

7. Maintaining proper distances between the panels, install the remaining panels in the same way.

1

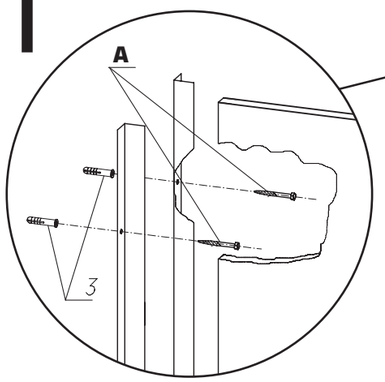

1. Mark a line on the floor parallel to the rear wall at a distance of „**D**"
2. After making sure that the wall-side cabin element is positioned vertically and that the profile is flush against the wall, mark on the wall the bracket fixing points aligned with the holes in the profile.
3. Move the wall-side element aside and drill holes at the marked points: ø 8 mm, 60 mm deep, then insert the wall plugs supplied in the set.
4. Screw the profile to the wall using screws:
A - ø 5.0 x 50 mm, insert the wall-side element, and level it vertically.

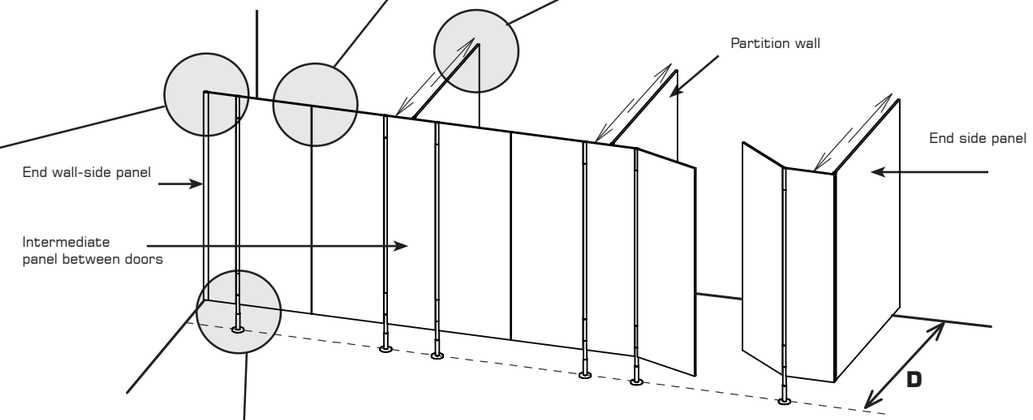

2

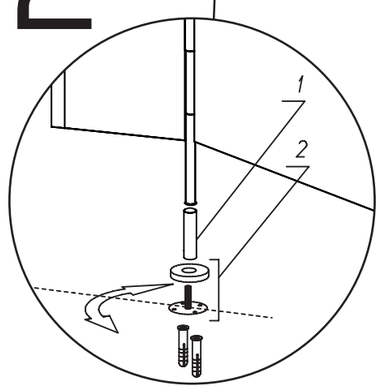

1. After leveling the wall-side panel vertically, mark the points where holes for the wall plugs will be drilled (not applicable to Type III enclosure).

2. At the marked locations, drill holes with an 8 mm drill bit to a depth of approx. 60 mm.

Important: In the case of significant floor slopes (exceeding 2 cm), adjust the initial clearance accordingly.

3. By turning the support bases, adjust the clearance between the panel and the floor, then tighten the M10 lock nut using a 17 mm open-end wrench.

4. Screw the support base to the floor using screws:

A - 5,0 x 50 mm

Note: If underfloor heating is installed in the room, the supports must be glued in place.

3

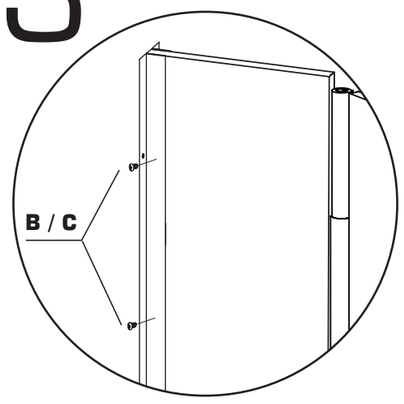

1. Screw the panel to the brackets using screws:

HPL construction:

B - ø 4,2 x 9,5 mm.

MFC construction:

C - ø 4,2 x 16 mm.
Note: The holes in the profile must be enlarged using a ø 3.5 mm drill bit.

2. Temporarily support the door until the remaining elements are installed.